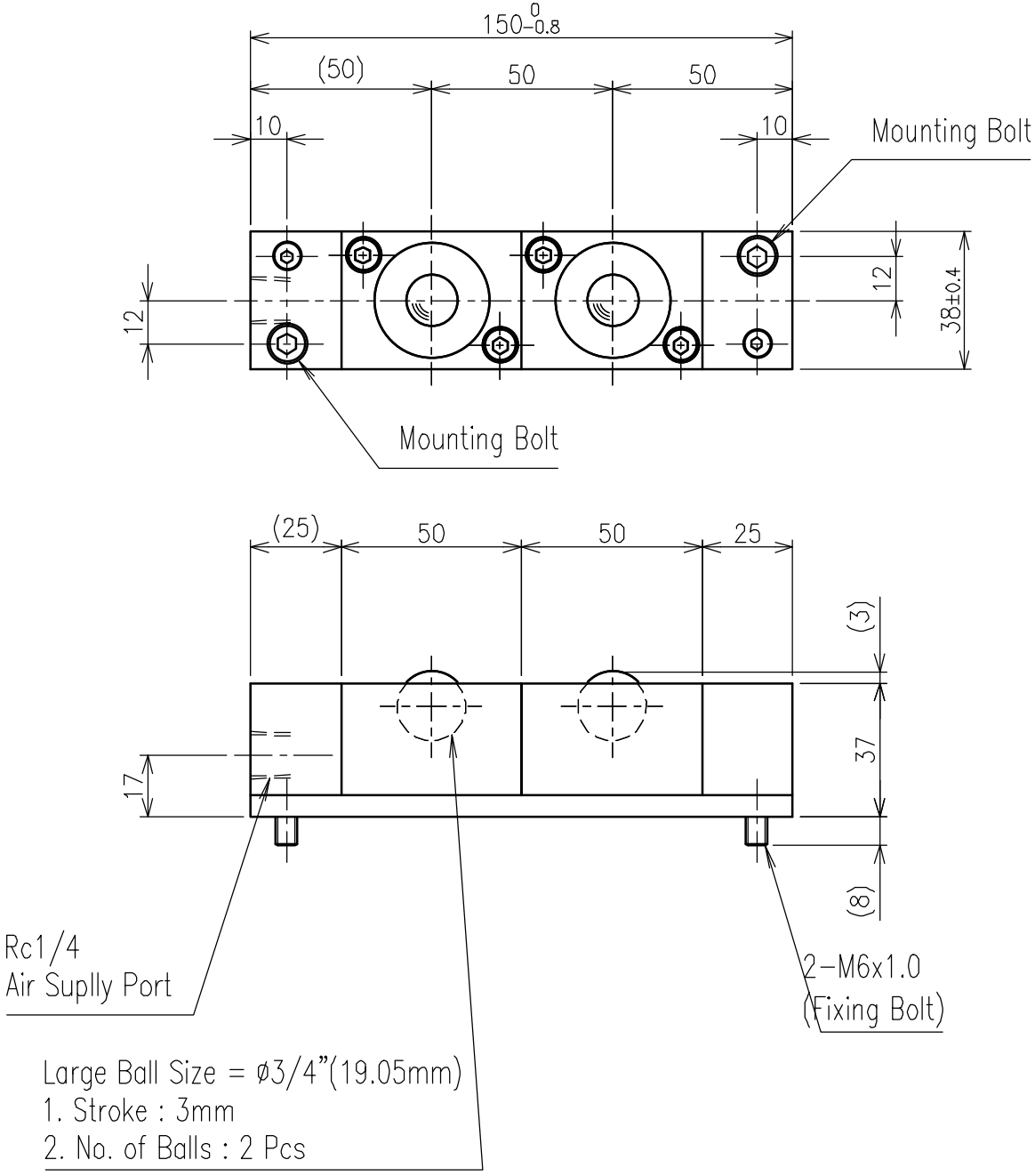

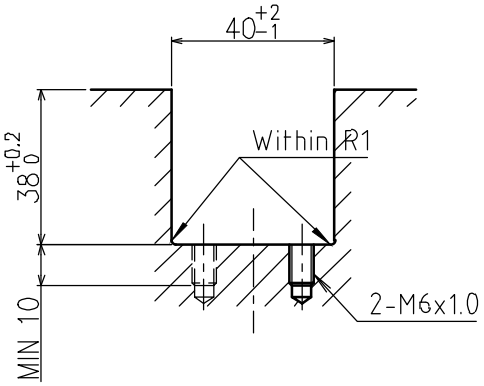

Dimension for mounting

>Description

ISR-C38 Type Cleanroom Air Ball Lifter

ISR-C38-150-A Type

Unit = mm