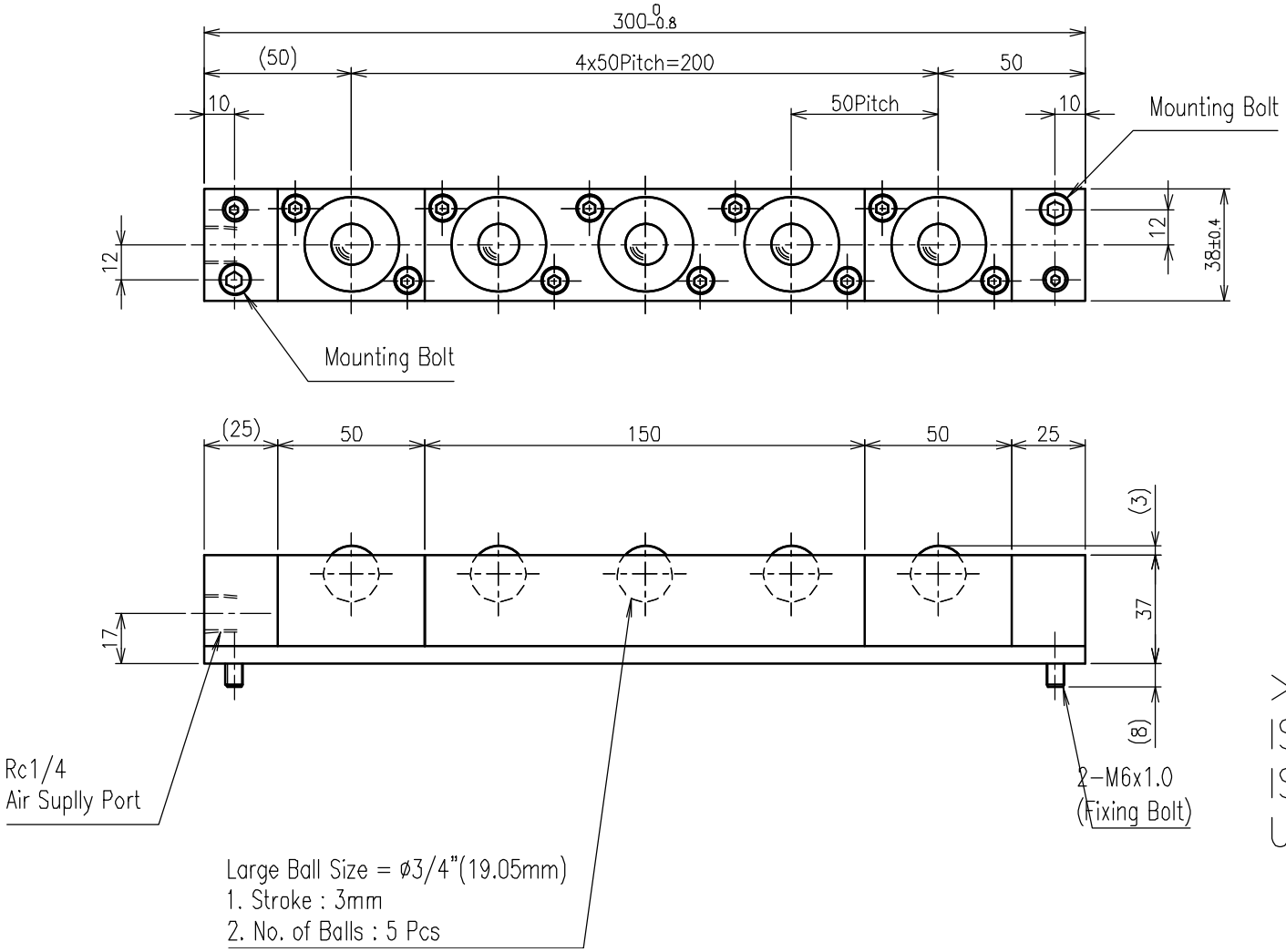

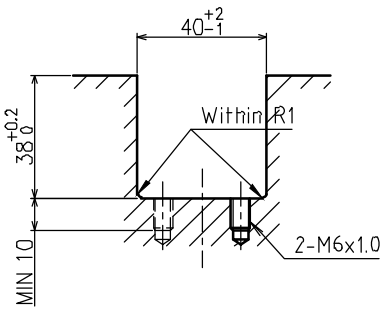

Dimension for mounting

>Description
ISR-C38 Type Cleanroom Air Ball Lifter
ISR-C38-300-A Type
Unit = mm