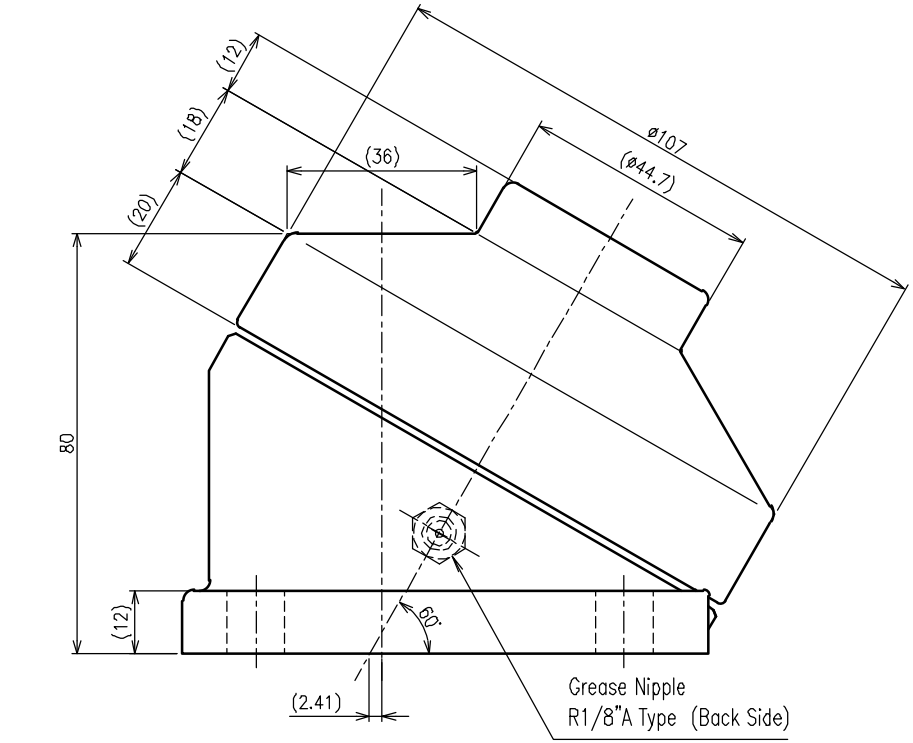

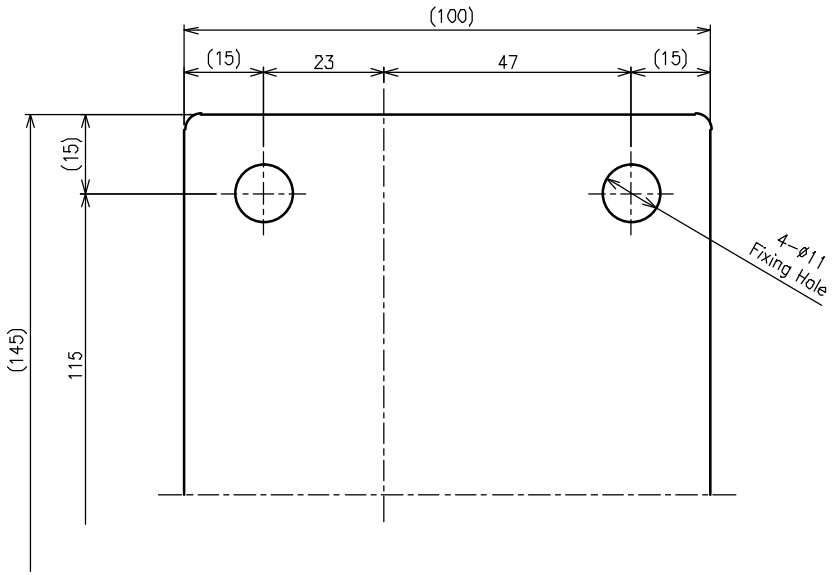

>Description
SW Special Wheel
SW-80-K Type
Unit = mm

>Specification
Product Weight = 4.2kg
Load Capacity = 400kgf

Head = S45C
Body = FC250