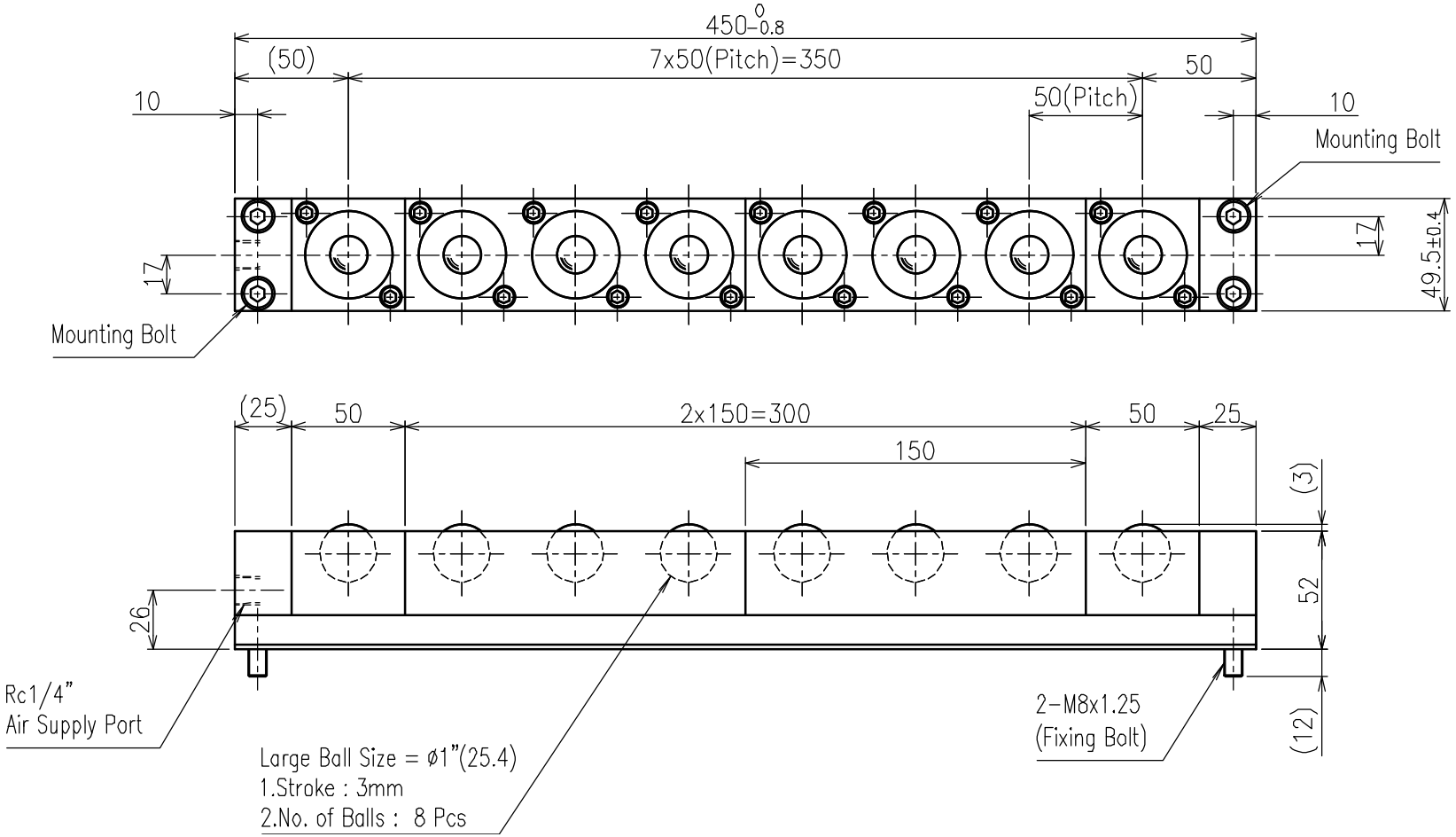

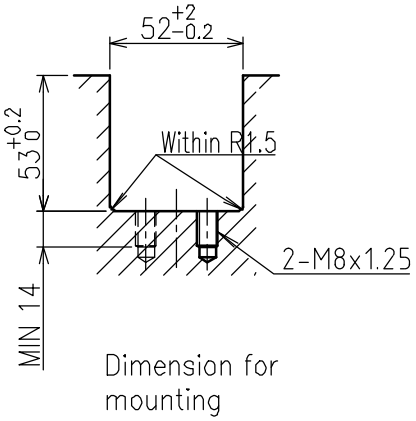

>Description
ISR50S Type Air Ball Lifter
ISR50S-450-A Type
Unit = mm